TESSOLVE
A Hero Electronix Venture

i.MX8M Plus Two Wheeler Cluster

i.MX8M Plus Two Wheeler Cluster

High-performance Two Wheeler cluster based on Tessolve i.MX8M Plus based OSM System on Module.
This platform can connect vehicle data to cloud and can run high performance HMI application.



BLOCK DIAGRAM

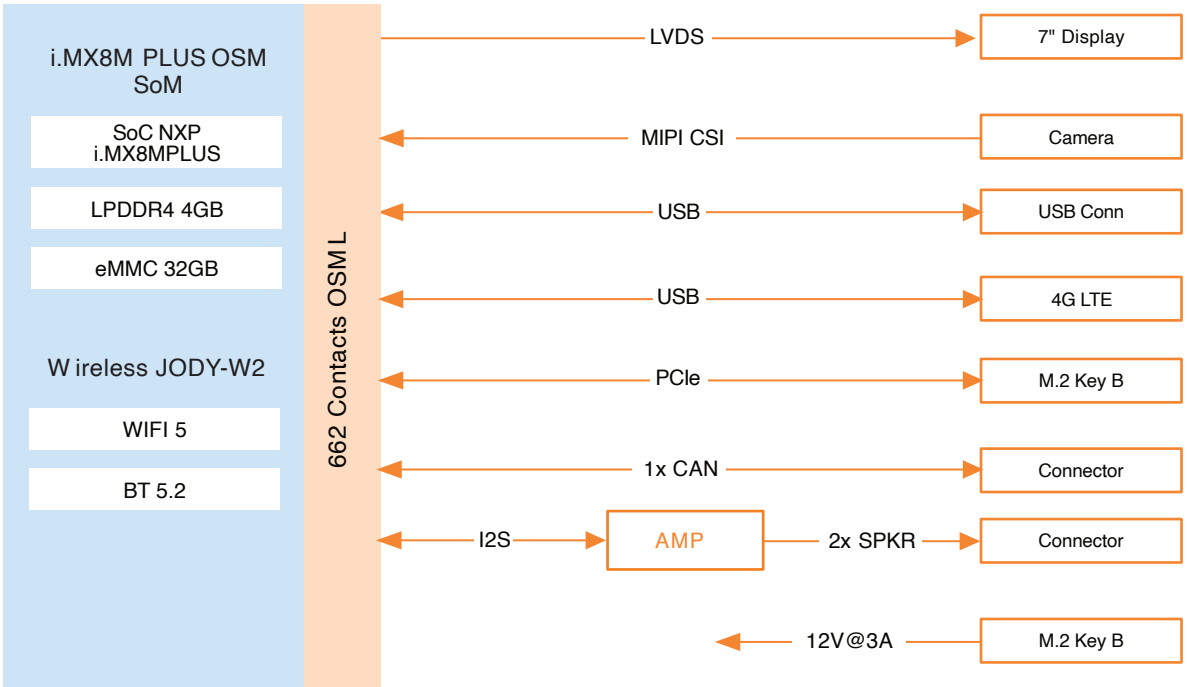

FEATURES

SoC	NXP i.MX8M Plus
Supported OS	Linux v5.4.69 and U-boot v2020.04, Yocto 3.2 (Gatesgarth)
Memory	2GB/4GB LPDDR4 and 16GB/32GB eMMC
Power Input	12V
Wireless connectivity	WiFi 2.4G, BT5.2 I Cellular 4G LTE
Wired connectivity	1x CAN/ CAN FD
Location	GPS + GLONASS
Display	7" LVDS display with multi Touch
Applications	Instrument Cluster for Two Wheelers and automotive clusters Multimedia and IoT
Operating Temperature	40 Deg C to +105 Deg C

ORDERING INFORMATION

Article	Part No**.	Description
Cluster	M2A-8MPDDC-TGU-AT	i.MX8MPLUSTwo Wheeler Cluster

**Contact TESSOLVEfor other possible memory and temperature configurations

All data is for information purposes only. Although all the information contained within this document is carefully checked, no guarantee of correctness is implied or expressed. Product names, logos, brands, and other trademarks featured or referred are the property of their respective trademark holders. These trademark holders are not affiliates with Tessolve Semiconductor Pvt. Ltd. – Rev. August 2026

TESSOLVE
A Hero Electronix Venture

+91 80 68162626 inquiry@tessolve.com www.tessolve.com

© 2026 Tessolve Semiconductor Pvt Ltd.
All rights reserved.